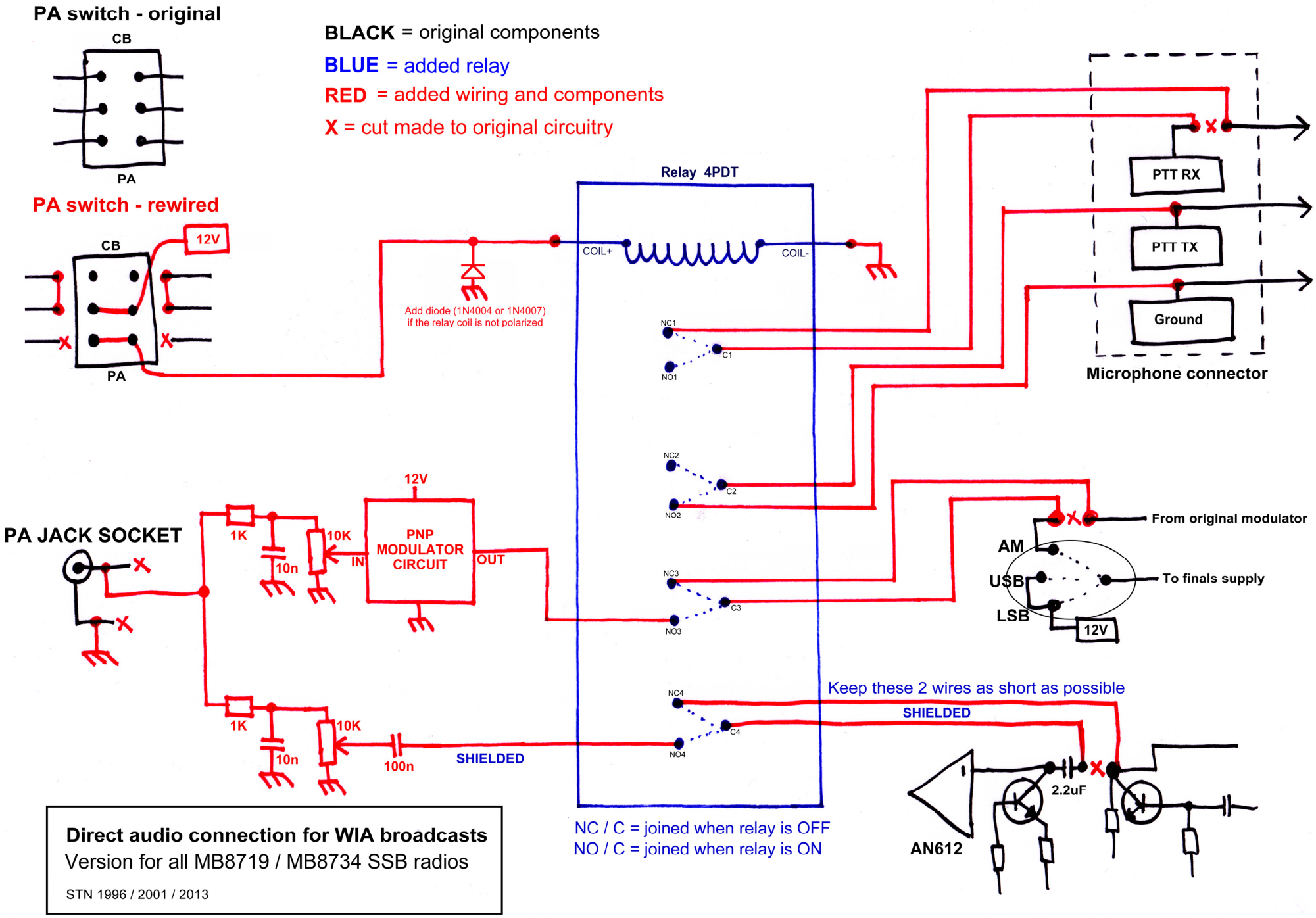
PA switch - original
CB
PA
BLACK = original components
BLUE = added relay
RED = added wiring and components
X = cut made to original circuitry
PA switch - rewired
CB
12V
PA
Add diode (1N4004 or 1N4007)
if the relay coil is not polarized
Relay 4PDT
COIL+
COIL-
NC1
C1
NO1
NC2
C2
NO2
NC3
C3
NO3
NC4
C4
NO4
PTT RX
PTT TX
Ground
Microphone connector
PA JACK SOCKET
1K
10n
10K
IN
12V
PNP
MODULATOR
CIRCUIT
OUT
1K
10n
10K
100n
SHIELDED
From original modulator
AM
USB
LSB
To finals supply
12V
Keep these 2 wires as short as possible
SHIELDED
2.2uF
AN612
NC / C = joined when relay is OFF
NO / C = joined when relay is ON
Direct audio connection for WIA broadcasts
Version for all MB8719 / MB8734 SSB radios
STN 1996 / 2001 / 2013