Lankar DW-1200 block and schematic diagrams. Also applies to Super Lion Mk 2, very similar with only slight control wiring differences.

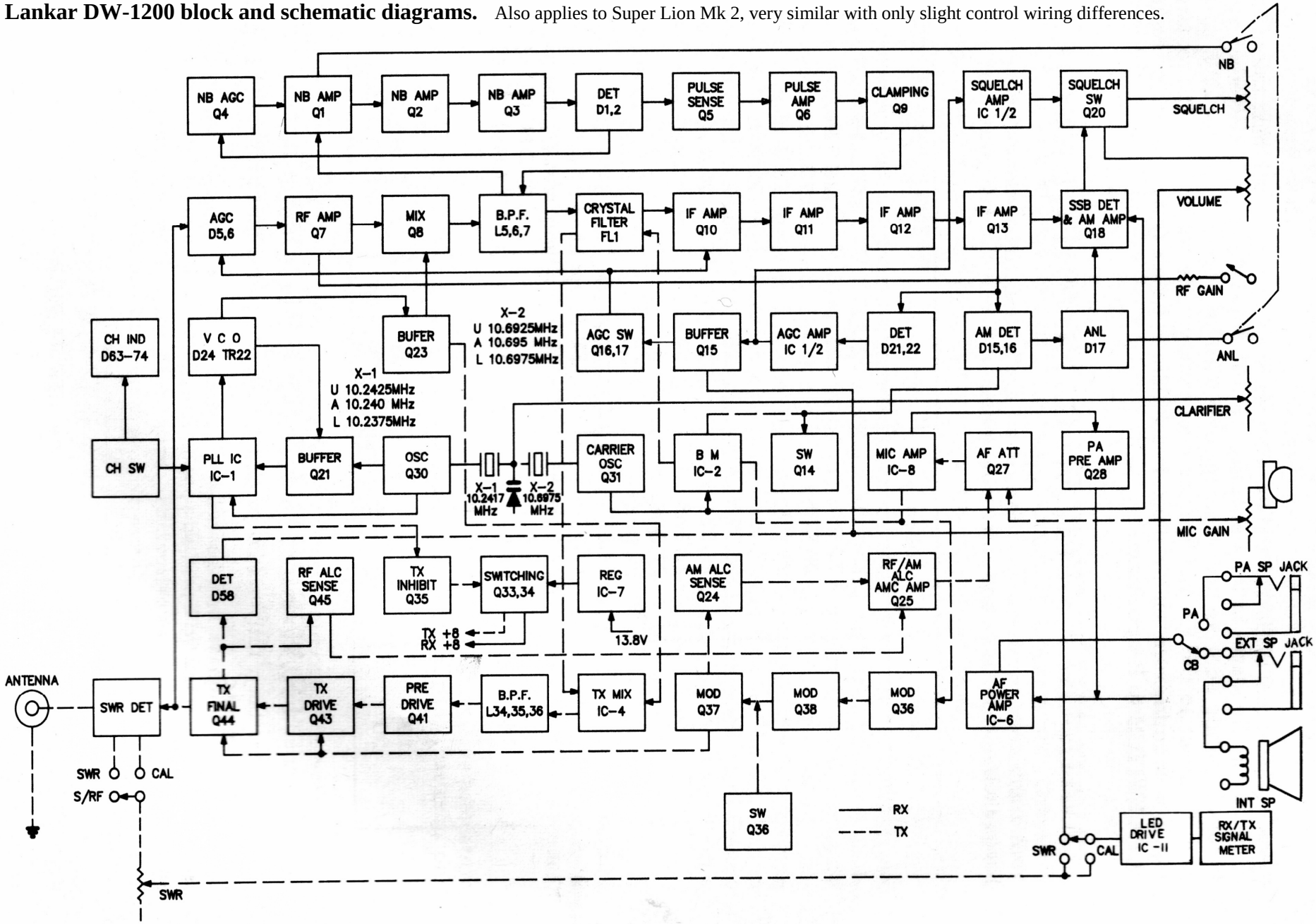

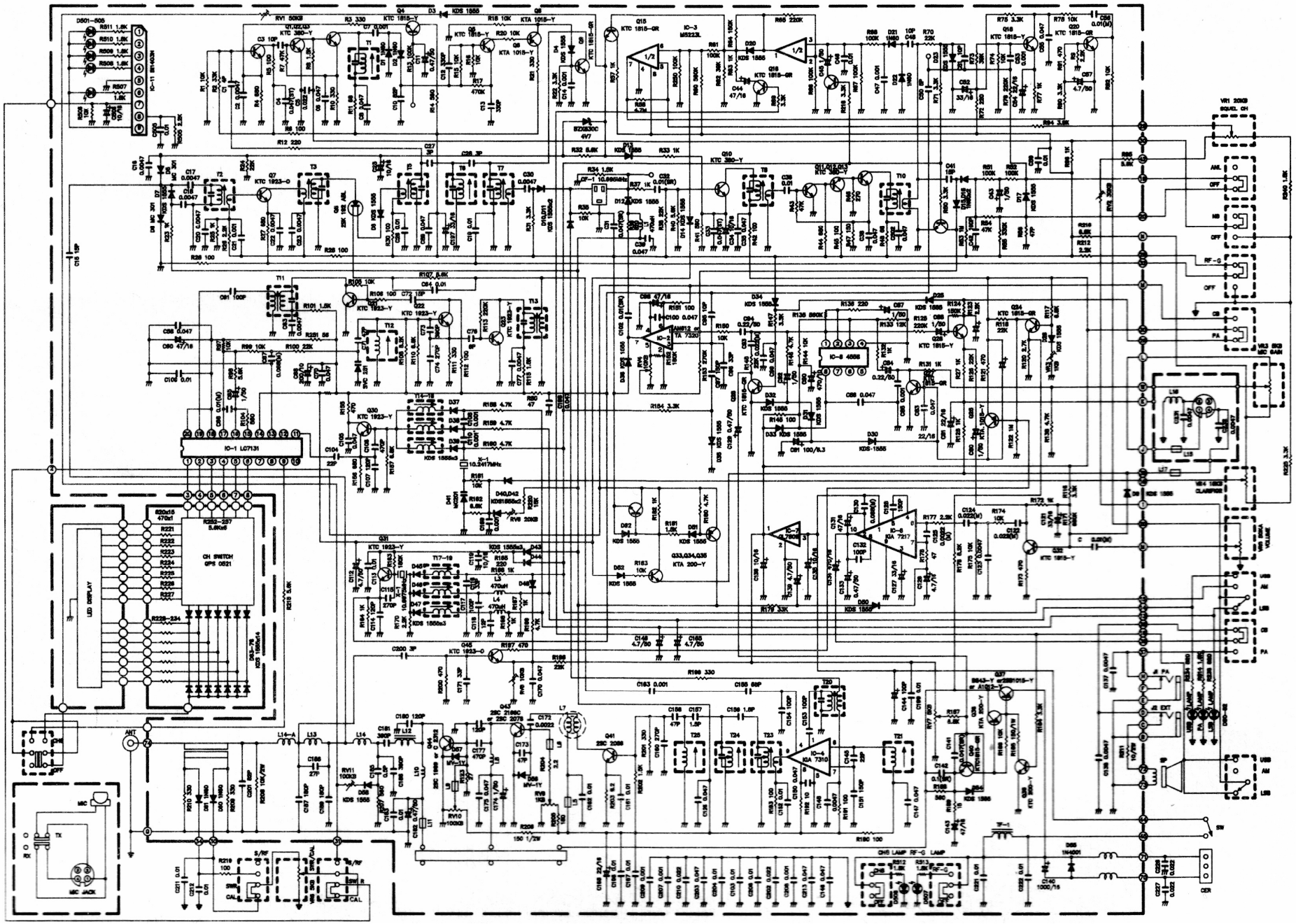
IC-1 LC7131
IC-2 TA7230
IC-3 M5223L
IC-4 TA7310
IC-5 TA7217
IC-6 4066
IC-7 7805
CH SWITCH GPS 0521
LED DISPLAY
ANT
MIC
MIC JACK
TX
S/RF
SW
CAL
SQUEL CH
AML
OFF
NB
RF-G
CB
PA
MIC GAIN
VOX GAIN
CLAMPER
VOL
USB
AM
LSB
SW
CHS LAMP RF-G LAMP
CER